GYMNOVA
CS 30056 - 45 RUE GASTON DE FLOTTE
13012 MARSEILLE CEDEX 12 (FRANCE)
TEL. 33.(0).4.91.87.51.20 - FAX.33.(0).4.91.93.86.89
www.gymnova.com - info@gymnova.com

ISO 9001
ISO 14001
BUREAU VERITAS
Certification

ASSEMBLY INSTRUCTIONS	NM05e	24/03/10
HIGH BAR FOR TRAINING WITH CABLES M'2010	3120G - 3125G	

KEEP THIS DOCUMENT

Warning:

This equipment should be installed by a qualified individual.
The apparatus should be used by only one person at a time, supervised by a qualified individual and with appropriate landing mats or a landing pit.
Using this equipment for purposes other than those originally intended is not allowed.

Compliance:

This equipment complies with the requirements of the European standard EN 913 "Gymnastic equipment - General safety requirements and test methods" and EN 12197 "Gymnastic equipment – High Bars – Safety requirements and test methods – type 3".

Recommendations:

As shown in French Standard NF S 52-400 the following is recommended:
- keep these instructions for subsequent reference (inspection, maintenance, etc.).
- periodically carry out predictive maintenance.
- depending on how much it is used, have the equipment serviced yearly or every few years.

Weight of the apparatus:

Ref.: 3120G —> 57 kg (125.66 lb) Ref.: 3125C —> 54 kg (119.05 lb)

Overall size:

- Apparatus without cabling: 2.63 x 0.10 m (8.63 x 0.33 ft)
- With standard cabling: 5.50 x 4.00 m (18.04 x 13.12 ft)
- With short cabling: 4.00 x 2.00 m (13.12 x 6.56 ft)

Packaging:

Ref. \ Package	3120/50 Pair of sliding tubes – High Bar for training	3120/60 Pair of uprights – High Bar for training	3110 Hand-rail – High Bars	3011B Standard cabling – High bars	3012B Short cabling – High bars	No. of Packages
3120G High Bar for training with standard cabling	1	1	1	1	-	4
3125G High Bar for training with short cabling	1	1	1	-	1	4
Volume (ft³) **Weight (lb)** **Dimensions (in)**	1.031 24.25 30.71x8.66x6.70	1.059 57.32 113.39x5.12x3.15	0.434 26.46 98.43x2.76x2.76	0.544 21.83 19.68x11.02x4.33	0.576 15.43 20.08x11.42x4.33	

Constantly aiming to improve our products, we reserve the right to make changes to the equipment and dimensions without further discussion.

I. Preparing the cables:

- Standard cabling **(Ref.: 3011B)** : Refer to the Assembly Instructions NM180.
- Short cabling **(Ref.: 3012B)** : Refer to the Assembly Instructions NM179.

II. Assembling the apparatus (minimum of two people required):

Note: Prepare a clean area for assembling the apparatus.

1 - Position the hand-rail **(3)** on the floor, to view the spacing of uprights **(1)**.
2 - Lay both uprights **(1)** parallel on the floor.
3 - Install the sliding tubes **(2)** in high position (maximum) onto the uprights **(1)** (thumbscrews **(4)** outward).
4 - Remove the black plastic caps **(8)** from the end of uprights **(1)**, insert the spacers **(11)** inside (see **Fig. 1**).
5 - Install 2 bracing flats **(10)** on the top of each upright **(1)**, using the screws **(12)**, **(13)** and **(14)**, then moderately tighten to allow flats **(10)** to be turned with regard to the cables. Put up again the black plastic caps **(8)**.
6 - Install the hand-rail **(3)** onto the sliding tubes **(2)** using pins **(9)** (see **Fig. 2**).
7 - Position the pivots **(6)** into their housings, in line with the plotting, or the connecting flat **(7)** on the floor. Attention : plastic washers **(17)** have to be placed like **Fig. 3** or **4**.

III. Assembling, adjusting and tightening the cables:

Important: When the vertical position of the uprights **(1)** is adjusted, and before tightening the cables, do not forget to lock the bracing flats (on top of the uprights).

- Standard cabling **(Ref.: 3011B)** : Refer to the Assembly Instructions NM180.
- Short cabling **(Ref.: 3012B)** : Refer to the Assembly Instructions NM179.

IV. Adjusting the height (see **Fig. 5** and **Fig. 6**):

1 - Loosen the cabling **(15)** or **(16)** using the quick tighteners (see NM180 or NM179).
2 - Unlocking: loosen the thumbscrews **(4)** by 2 to 3 turns on both of the sliding tubes **(2)**.
3 - Unnotching: press and hold down the pawl **(5)**.
4 - Raise or lower the sliding tubes **(2)** until the bar is at the desired height.

Important:

- Notching: make sure that the height is locked by checking that each pawl **(5)** is locked against the sliding tubes **(2)**. In this position, it should not be possible to raise nor lower the sliding tubes **(2)**.
- Check that both sliding tubes **(2)** are adjusted to the same height (horizontal hand-rail) — this is mandatory.

5 - Locking: Tighten the thumbscrews **(4)**.
6 - Retighten the cables **(15)** or **(16)**.

V. Adjustment values:

Height of hand-rail: 0.95 to 2.75 m . From the bottom: 6 locking notches per steps of 20 cm, then 7 locking notches per steps of 10 cm)

VI. Usage (warranty validity):

For safety reasons:

- This high bar is a training apparatus and, as such, should never be used as a competition apparatus.
- Never use abrasive materials on the hand-rail, in order to avoid modifying the mechanical properties of the steel.

VERY IMPORTANT:

- Never modify the cable tightening in accordance with the height of the hand-rail **(3)**. In lower position, it is normal for the cables to look loose.
- Do not install the removable access platform (Ref.: 2720) on the uprights of this apparatus.

VII. Maintenance:

- Before use, check the state of wear parts and safety parts each time: thumbscrews **(4)** tightened, pawls **(5)** notched, cabling (quick links closed, etc. see NM177, NM178), plastic washers **(17)**, pins **(9)** in good condition and locked, hand-rail **(3)** (to be periodically replaced depending on usage).
- Maintain the hand-rail **(3)**: remove the pins **(9)**, clean (magnesium deposits), lubricate the hand-rail ends, then re-install the hand-rail.
- Check the cabling **(15)** or **(16)** tightening.
- Check the tightness of all the attachment elements **(12) + (13)** also the bracing flats of anchors.

Figure 1

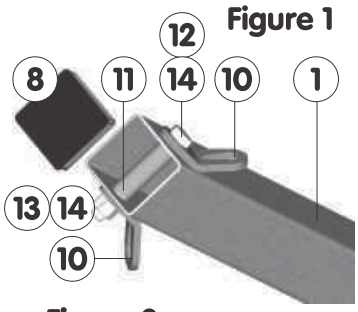

Figure 2

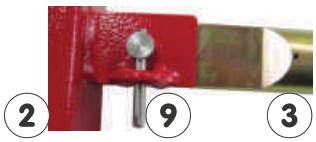

Figure 3

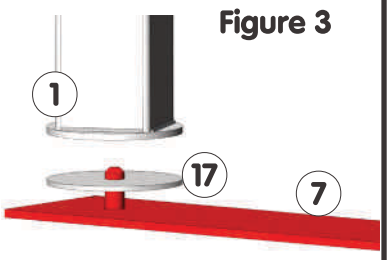

Figure 4

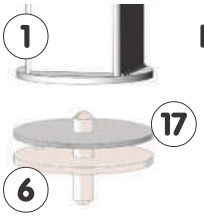

Figure 5

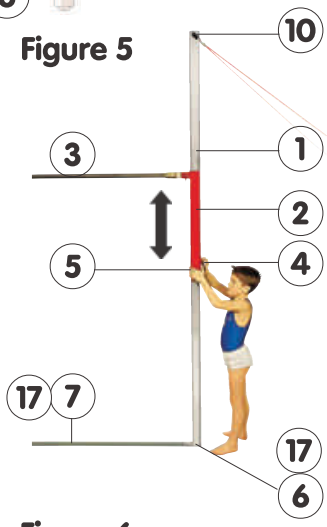

Figure 6

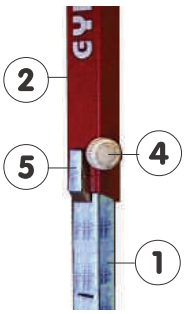

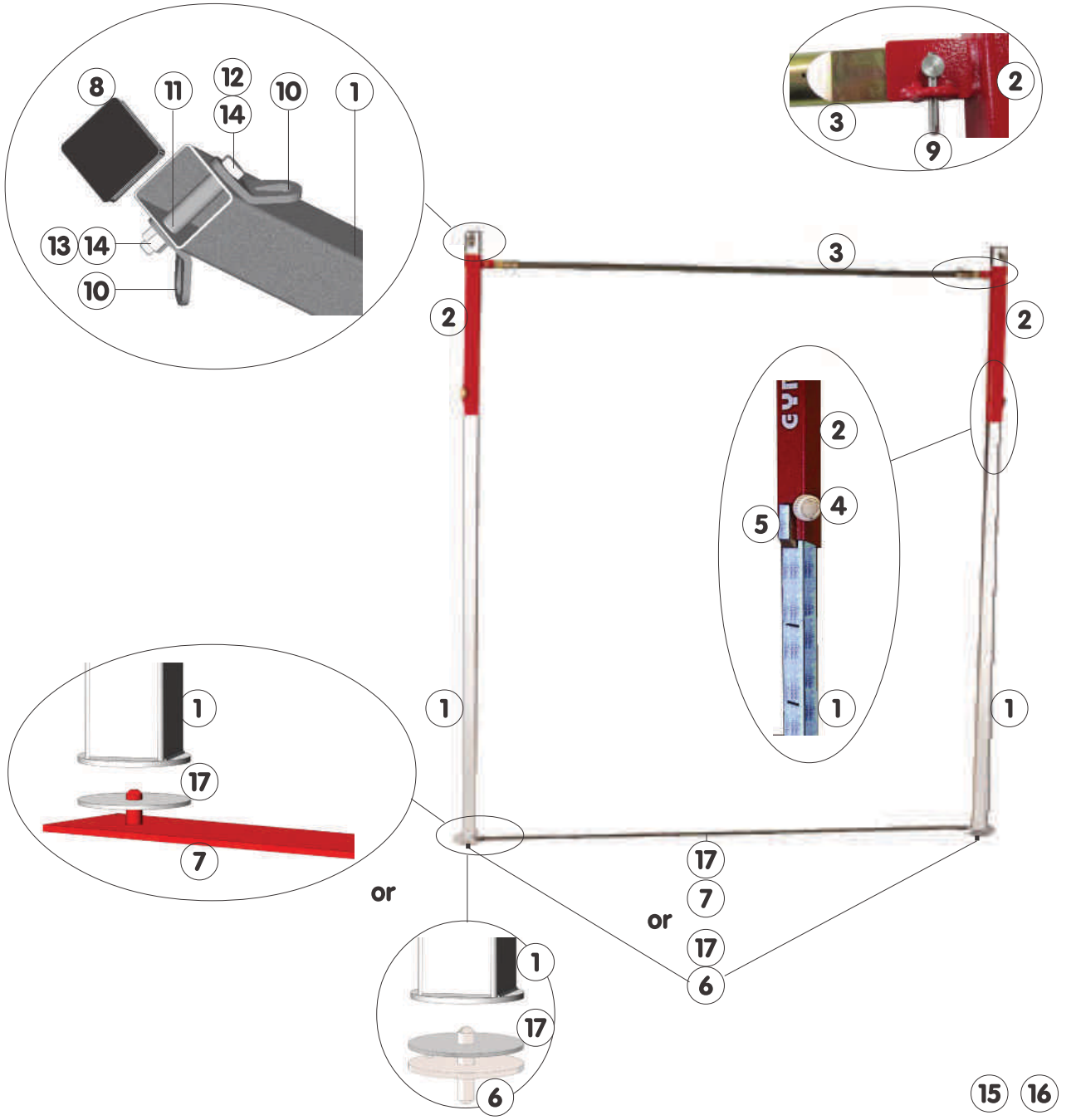

To order spare parts, provide the description, part no., and delivery date of the entire apparatus.

ITEM	QTY	DESCRIPTION	REFERENCE	REMARKS
30	-	-	-	-
29	-	-	-	-
28	-	-	-	-
27	-	-	-	-
26	-	-	-	-
25	-	-	-	-
24	-	-	-	-
23	-	-	-	-
22	-	-	-	-
21	-	-	-	-
20	-	-	-	-
19	-	-	-	-
18	-	-	-	-
17	2	Interface plastic washer	-	included in 2&6
16	1	Short cabling – High Bar	3012B	see NM179
15	1	Standard cabling – High Bar	3011B	see NM180
14	4	L 12x32 flat washer	VRP012320Z	included in 2
13	2	M12 H locknut	VEHF12000Z	included in 2
12	2	M12x90 H screw	VH0012090Z	included in 2
11	2	High Bar upright spacer	-	included in 2
10	4	Bracing flat	X3120/12	included in 2
9	2	Stainless steel pin	322/13	included in 2
8	2	60x60 plastic cap	QEPA6060NO	included in 1
7	1	Connecting flat - Training HB	3120/62	optional pack
6	2	Pair of High Bar pivots for pit	3120/52	included in 2
5	2	Locking Pawl + Spring	333/29	included in 2
4	2	Tightening thumbscrew	333/38	included in 2
3	1	Hand-rail - Training HB	3110	pack
2	1	Flat + Pair od slides - Training HB	3120/50	pack
1	1	Pair of uprights for High Bar, training + flat	3120/60	pack

GYMNOVA
RUE GASTON DE FLOTTE
13012 MARSEILLE
Tél. : 33-(0)-4-91-87-51-20
Fax : 33-(0)-4-91-93-86-89

High Bar for Training with Cables M'2010

BY: J.BRIOT	DATE: 24/03/10	NM05e	Ref. : 3120G - 3125G

THIS DOCUMENT IS THE PROPERTY OF GYMNOVA, IT IS CONFIDENTIAL AND SHALL NOT BE REPRODUCED WITHOUT PRIOR AUTHORIZATION

GYMNOVA
CS 30056 - 45 RUE GASTON DE FLOTTE
13012 MARSEILLE CEDEX 12 (FRANCE)
TEL. 33.(0).4.91.87.51.20 - FAX.33.(0).4.91.93.86.89
www.gymnova.com - info@gymnova.com

ISO 9001
ISO 14001
BUREAU VERITAS
Certification

ASSEMBLY INSTRUCTIONS	NM180c	05/03/09
STANDARD CABLING M'2009 FOR HIGH BARS	**3011B**	

KEEP THIS DOCUMENT

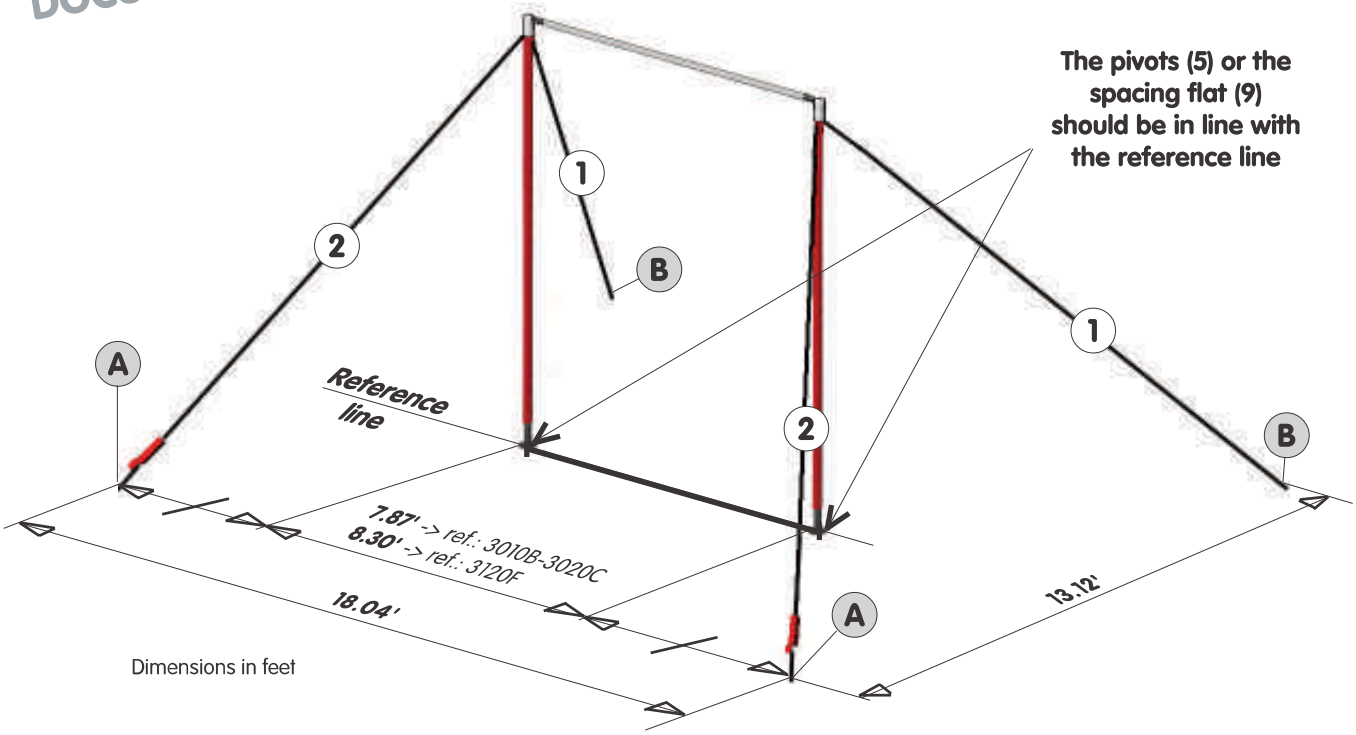

Warning:

This equipment should be installed by a qualified individual.
The apparatus should only be used by one person at a time, under the supervision of a qualified individual.
Using this equipment for purposes other than those originally intended is not allowed.
Attachments that are not provided with the apparatus may only be used if the support complies with the **CC34** specifications for GYMNOVA chemical anchors, (ref. : 2005 or ref. : 2010) or **CC22** for GYMNOVA retractable anchors, (ref. : 2000/40 - 2000/80).
Make sure that the quick links are closed and anchors are tightened before tightening the cables.
Do not use the equipment when the cables are slack.

Compliance:

This equipment complies with the requirements of the European standard EN 913 "Gymnastic equipment - General safety requirements and test methods".

Recommendations:

As shown in French Standard NF S52-400 the following is recommended:
- keep these instructions for subsequent reference (inspection, maintenance, etc.).
- periodically carry out predictive maintenance.
- depending on how much it is used, have the equipment serviced yearly or every few years.

Packaging:

1 Pack (ref.: 3011B) Dimensions : 500 x 280 x 110 mm (19.7 x 11 x 4.33 in)
Masse : 9,4 kg (20.72 lb) Volume : 0.0154 m³ (0.54 ft³)

Constantly aiming to improve our products, we reserve the right to make changes to the equipment and dimensions without further discussion.

I. Preparing the cables:

1 - Floor positioning (see **Fig. 1 or 2**):

- Plot the floor positioning of the anchors and the spacing flat **(9)** (or the distance between the pivots **(5)**).
- Drill in accordance with the assembly instructions **NM13** for chemical anchors or **NM25** for retractable anchors (for pivots **(5)**: drill ø12.45 mm (1.77 in) deep, if required).

Important:
- The cable attachment points must resist 800 daN (see: NF S52-400).
- It is mandatory that **the uprights** are aligned with the reference line.

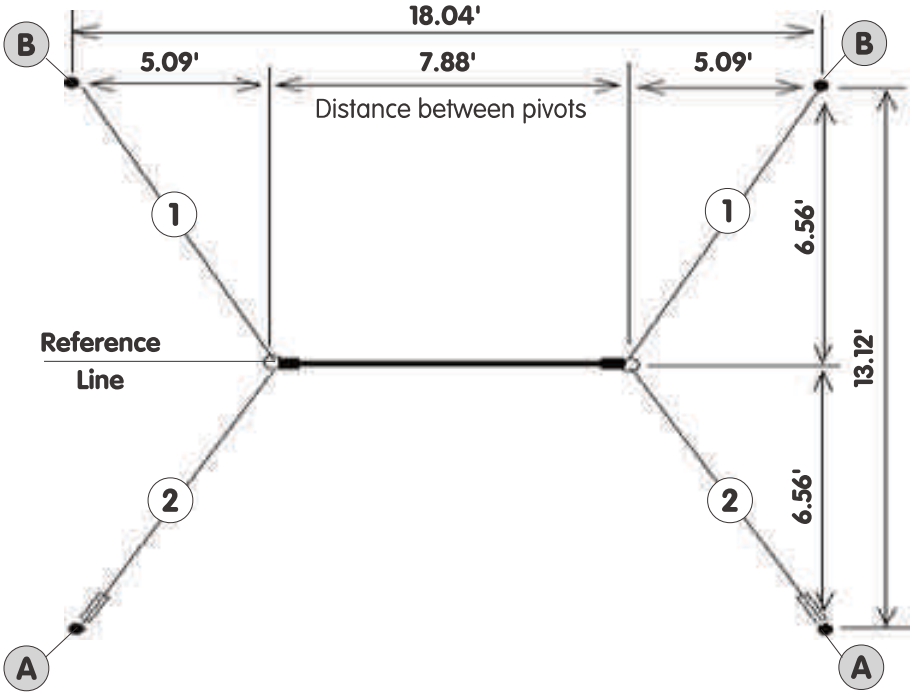

Figure 1
(Ref.: 3010B - 3020C)

Layout checking dimension:
22.31 ft diagonal

Figure 2
(Ref.: 3120F)

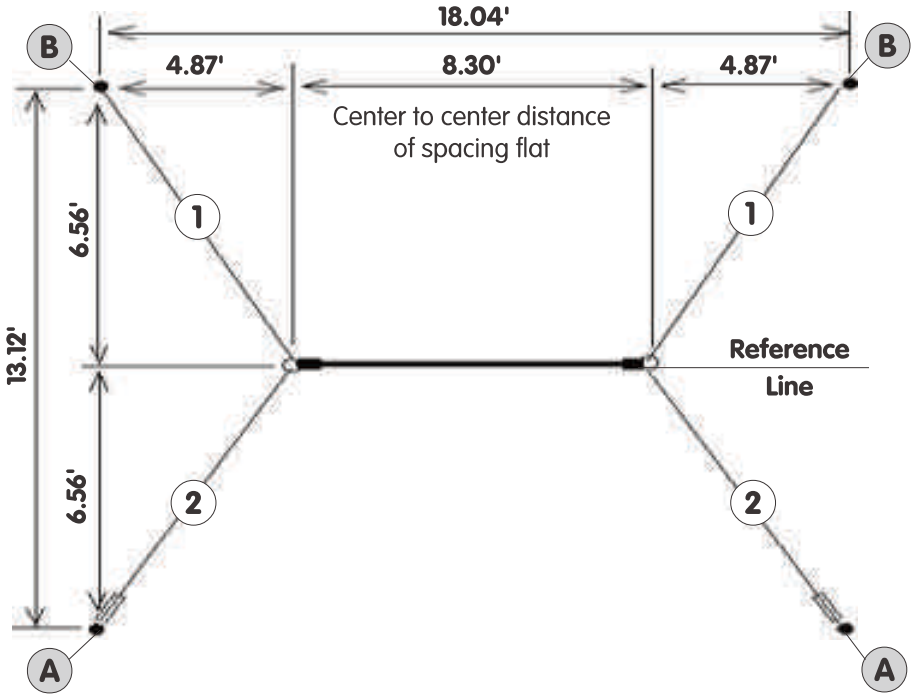

Dimensions in feet

2 - Layout of cabling items:

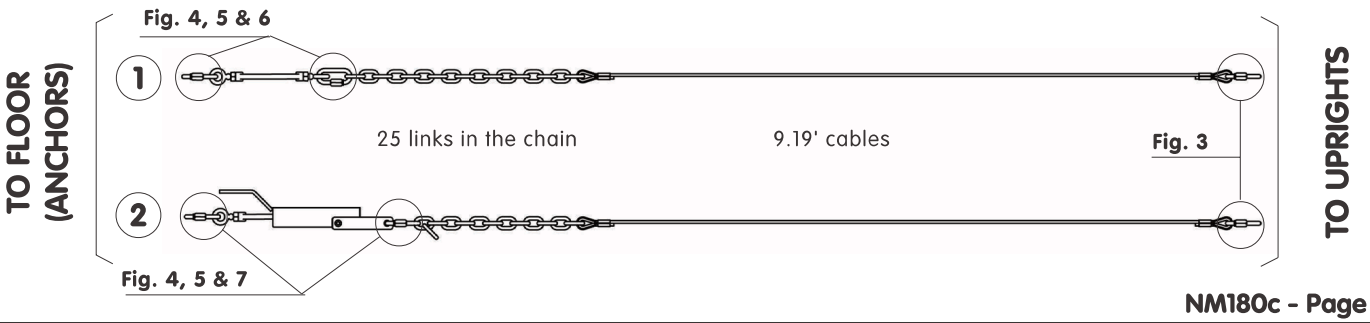

3 - Assembly principle and precautions:
- Make sure you assemble the quick links **(3)** in the proper direction (always tighten downward) like **Fig. 3**.
- Adjust the turnbuckles **(8)** to medium length to enable the cables to be adjusted easily like **Fig. 6**.

Note: Do not lock the floor attachments so that the bracing flats **(6)** can be positioned.

Figure 3 - quick link **(3)** / upright assembly

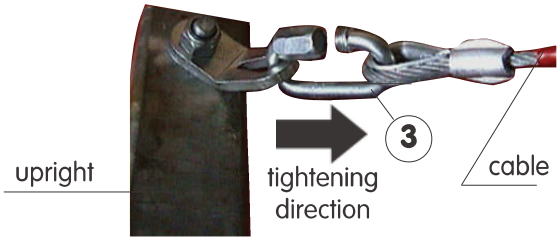

Figure 4 & 5 - quick link **(3)** / chain assembly

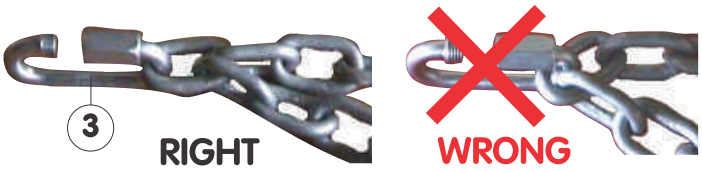

Figure 6 - quick link **(3)** / turnbuckle tie **(8)** assembly

Figure 7 - quick link **(3)** / quick tightener **(4)** assembly

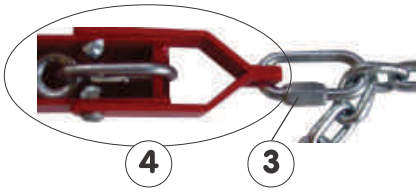

II. Assembling the cables (minimum of 2 people required):

- Identify the location of each cable using **Fig. 1 or 2** (on page 2) and the general view (on 1st page).
- Once the respective positions of the cables are determined, attach end of cables on all the uprights, using quick link **(3)**, observing their assembly and tightening direction like **Fig. 3**.
- Hook the cables **(1)** to the rear anchors **(B)** using the quick links **(3)** setting chain lengths.
- Lift the high bar and set it into the pivots **(5)** or onto the spacing flat **(9)**.
- Hold the apparatus and hook cables **(2)** to the front anchors **(A)** using the open quick tightener **(4)**.
- Set each upright assembly vertical (use a level) by adjusting the chain links, then fine-tune the adjustments using the turnbuckles **(8)**.

III. Adjusting and tightening the cables:

Important: Remember to lock all the floor attachments **(7)** before tightening the cables.

1 - To fine-tune the tension of cables **(2)**, open the quick tightener **(4)** (see **Fig. 9**), screw or unscrew the turnbuckle **(8)**. Lock the locknuts, then close the quick tightener (see **Fig. 8**).

2 - Position the handle of the quick tightener **(4)** so that it is above the turnbuckle **(8)**.

3 - Important: Lock the quick links **(3)** and the locknuts on turnbuckles **(4)** and **(8)** using the wrench.

Figure 8 - Slack cabling: Open quick tightener

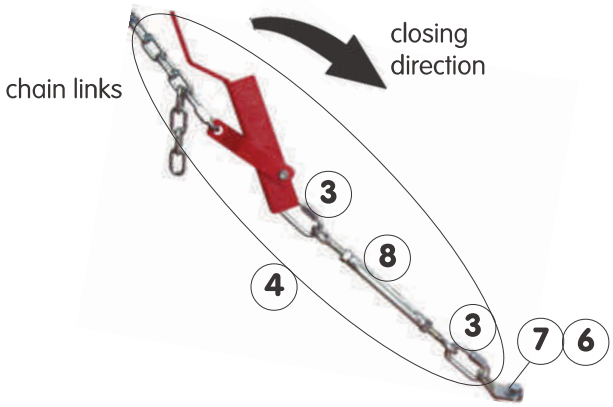

Figure 9 - Tightened cabling: Closed quick tightener

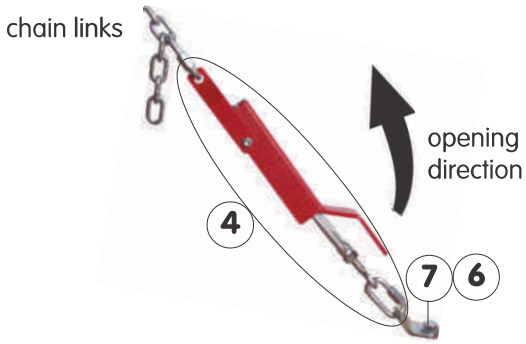

IV. Maintenance:

1 - A regular cleaning of the apparatus allows better viewing of the problems, if any (distortion, breakage, or corrosion).

2 - Before use, check wear parts and safety elements each time for good condition and operation: wear of cables, quick links **(3)**, chain links, bracing flats **(6)**, quick tighteners **(4)**, and turnbuckles **(8)**.

3 - Check the tightening of cables and closure of quick links, before each use.

4 - Check that the anchors **(7)** are locked and that they do not draw out from the floor.

5 - Important:
- If a problem is detected or suspected, do not use the equipment as long as it has not been checked by a technician.
- Any damaged or distorted piece should be replaced as soon as possible.

V. Storage:

Always store the equipment away from humidity and heat.

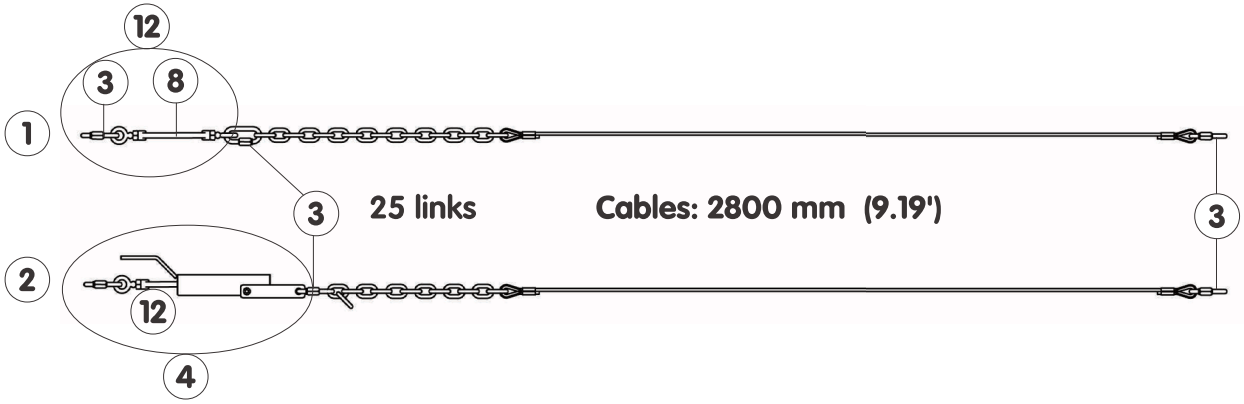

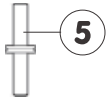

	1	2
Adjustment range (ft)	min: 10.48 Max: 13	min: 10.88 Max: 13.4

ITEM	QTY	DESCRIPTION	REFERENCE	REMARKS
28	-	-	-	-
27	-	-	-	-
26	-	-	-	-
25	-	-	-	-
24	-	-	-	-
23	-	-	-	-
22	-	-	-	-
21	-	-	-	-
20	-	-	-	-
19	-	-	-	-
18	-	-	-	-
17	-	-	-	-
16	-	-	-	-
15	-	-	-	-
14	-	-	-	-
13	-	-	-	-
13	-	-	-	-
12	4	M12 Turnbuckle + Quick link	QTELEMA812	each
11	-	Share of 4 brac. flats+screws	3120/40	spare kit
10	-	Share of 2 brac. flats+screws	3120/20	spare kit
9	1	Spacing flat for training HB	312/03	not provided
8	4	M12 O/O Turnbuckle tie	QTELE1012G	each
7	-	4 Anchors retract. hook	2000/40	not provided
7	-	4 Chimical anchors bolt	2010	not provided
6	4	Bracing flat	-	not provided
5	2	Support pivot	328/02	each
4	2	Quick tightener	2550A	spare kit
3	10	Quick link No.8	QMRA00008Z	each
2	2	High Bar cable-tightener	3011/22	spare kit
1	2	High Bar cable-turnbuckle	3011/21	spare kit

GYMNOVA
RUE GASTON DE FLOTTE
13012 MARSEILLE
Tél. : 33-(0)-4-91-87-51-20
Fax : 33-(0)-4-91-93-86-89

Standard Cabling M'09 for High Bars

BY: J.BRIOT | DATE: 05/03/09 | NM180c | Ref.: 3011B

THIS DOCUMENT IS THE PROPERTY OF GYMNOVA, IT IS CONFIDENTIAL AND SHALL NOT BE REPRODUCED WITHOUT PRIOR AUTHORIZATION.

To order spare parts, provide the description, part no. and delivery date of the entire apparatus.