GYMNOVA
CS 30056 - 45 RUE GASTON DE FLOTTE
13012 MARSEILLE CEDEX 12 (FRANCE)
TEL. 33.(0).4.91.87.51.20 - FAX.33.(0).4.91.93.86.89
www.gymnova.com - info@gymnova.com

ISO 9001
ISO 14001
BUREAU VERITAS
Certification

ASSEMBLY INSTRUCTIONS	NM37j	04/12/06

ELASTICALLY ADJUSTABLE RING FRAME M'2000

3770A

KEEP THIS DOCUMENT

Warning:

This equipment should be installed by a qualified individual.
The apparatus should be used by only one person at a time, supervised by a qualified individual and with appropriate landing mats or a landing pit.
Using this equipment for purposes other than those originally intended is not allowed.

Compliance:

This equipment complies with the requirements of the European standards EN 913 "Gymnastic equipment - General safety requirements and test methods" and EN 12655 "Gymnastic equipment – Rings – Safety requirements and test methods".
This equipment is F.I.G. approved.

Recommendations:

As shown in French Standard NF S52-400 the following is recommended:
- keep these instructions for subsequent reference (inspection, maintenance, etc.).
- periodically carry out predictive maintenance.
- depending on how much it is used, have the equipment serviced yearly or every few years.

Weight of the apparatus:

Ref. : 3770A —> 132 kg (291.01 lb)

Overall size:

- Apparatus without cabling: 4.37 x 0.10 m (172.05 x 3.94 in)
- Apparatus with standard cabling: 5.50 x 4.00 m (216.54 x 157.48 in)

Frame height:

- Maximum frame height: 6.02 m (237.01 in)

Packaging:

Ref. \ Package	377/02 Upper upright of dynamic frame	3770/03 Lower upright of dynamic frame	377/00 Head of dynamic frame	3770/14 Pair of ring + straps + cabling	3770/10 Bracing cables of ring frames	No. of Packages
3770A Elastically adjustable ring frame	2	2	1	1	1	7
Volume (ft³) **Weight (lb)** **Dimensions (in)**	1.1265 46.30 126.77 x 4.33 x 3.54	1.8081 52.91 120.08 x 5.51 x 4.72	4.2734 57.32 99.21 x 6.30 x 11.81	0.4485 6.61 14.17 x 12.60 x 4.33	0.8475 28.66 15.75 x 11.81 x 7.87	

Constantly aiming to improve our products, we reserve the right to make changes to the equipment and dimensions without further discussion.

I. Preparing the cables:

Refer to the Assembly Instructions NM181.

II. Assembling the apparatus (minimum of six people required) (see **Fig. 1**):

Note: Prepare a clean area for assembling the apparatus. Before starting the assembly, select the most easily accessible side to install the elasticity adjustment system.

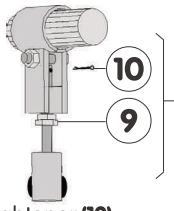

1 - Fit the frame head **(1)** and upper uprights **(2)** on the floor, then secure them using screws **(23)** and **(24)**.
2 - Fit the cable tightener **(12)** onto the lower upright **(3)**.
3 - Fit the lower uprights **(3)**.
4 - Slighly tension the elasticity adjustment cable **(14)**, then attach the tightener **(12)** and tighten the screw **(13)** using the wrench provided for this purpose.
5 - In order to obtain the 2.80 m prescribed height for the rings with regard to the floor, install the attachment elements **(21)** + **(23)** at the bottom of uprights **(3)** into the 4th hole of the sliding tubes **(4)** (3 visible holes). Moderately lock the attachment elements **(21)** + **(23)**.
6 - Install the rings together with their cables **(5)** on the frame head **(1)**: tighten each pivot **(8)** as shown in the detail of Figure 1, until abutting against the locknuts **(9)**, taking care not to modify their position (factory adjustment), then install the safety pin **(10)**.
7 - Install the pivots **(19)** into their housings on the floor, in line with the plotting, or position the spacing cable **(20)** at the bottom of the sliding tubes, **(4)** and lock it using the attachment elements **(25)** + **(23)**.

Figure 1

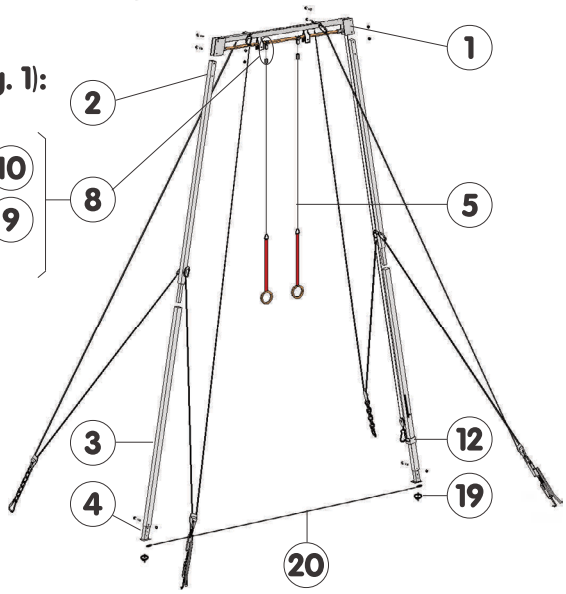

III. Assembling, adjusting and tightening the cables:

Important: When the vertical position of the frame is adjusted, and before tightening the cables, do not forget to lock all the attachment elements on floor.
Refer to the Assembly Instructions NM181.

Figure 2

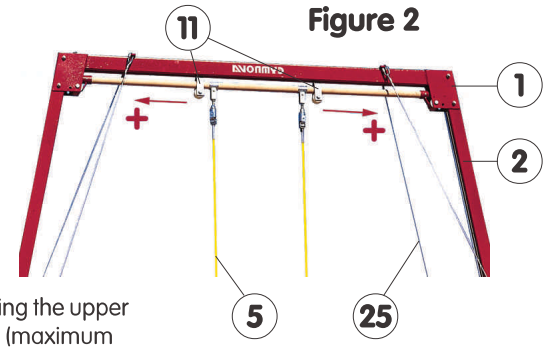

IV. Adjusting the elasticity (see **Fig. 2** and **Fig. 3**):

1 - Position the self-adhesive strip with graduation marks **(17)** so that **mark "1"** is facing the upper hand grip. This corresponds to the maximum adjustment of the frame flexibility (maximum spacing of silent-blocs **(11)** on the frame head **(—>+)**).
2 - Then, position the arrow of the adjustment self-adhesive strip **(18)** opposite **mark "20"**, which corresponds to the approved flexibility of the ring frame for competition (**F.I.G.** position).
3 - Operate hand grips to obtain the flexibility degree required.

Figure 3

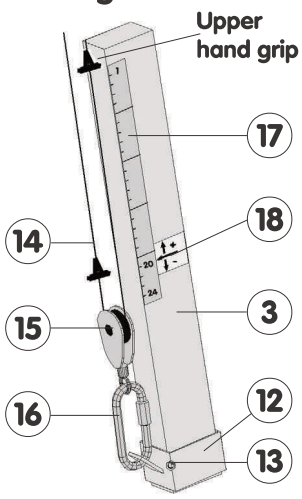

V. Adjusting the height:

1 - Loosen the cables **(25)** using the quick tighteners (see NM181).
2 - Slightly lift the upright **(3)** to remove the attachments **(21)** + **(23)** at the bottom of the uprights **(3)**.
3 - Raise or lower the uprights **(3)** until the bar is at the desired height.
4 - Install the attachment elements **(21)** + **(23)** at the bottom of the uprights **(3)** into the hole of the sliding tubes **(4)** corresponding to the desired height. Moderately lock the attachment elements **(21)** + **(23)**.

Important: Check that both sliding tubes **(3)** are adjusted to the same height - this is mandatory.

5 - Retighten the cables **(25)** using the quick tighteners.

VI. Adjustment values (see **Fig. 4**):

Ring height: **1st hole** = 2.65 m **2nd hole** = 2.70 m **3rd hole** = 2.75 m
4th hole (F.I.G.): = 2.80 m **5th hole** = 2.85 m **6th hole** = 2.90 m

VII. Maintenance:

1 - A regular cleaning of the apparatus allows better viewing of the problems, if any (distortion, breakage, or corrosion).
2 - Before use, check wear parts and safety elements each time for good condition and operation:
- pads **(7)**, the elasticity adjustment system (hand grips move on all the adjustment space),
- all the bracing cable elements (cables, tighteners, quick links locked, etc.).
- complete rings **(5)**: cables (no shreded), straps (no cut seams), and swivel pins (tightened). We recommend to change them regularly as required by usage frequency (at least every 3 years).

3 - Check the tightening of cables **(25)** and closure of quick links, ... (see NM181), before each use.
4 - Check the correct tightening of all attachment elements **(8)** + **(13)** + **(21)** + **(14)** + **(24)** and the locking of anchors.
5 - **Important:**
- If a problem is detected or suspected, do not use the equipment as long as it has not been checked by a technician.
- Any damaged or distorted piece should be replaced as soon as possible.

Figure 4

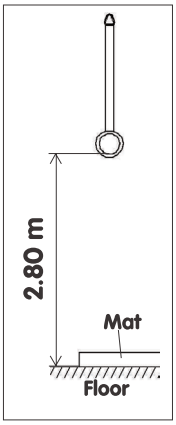

VIII. Storage:

Always store the equipment away from humidity and heat.

VII. Maintenance:

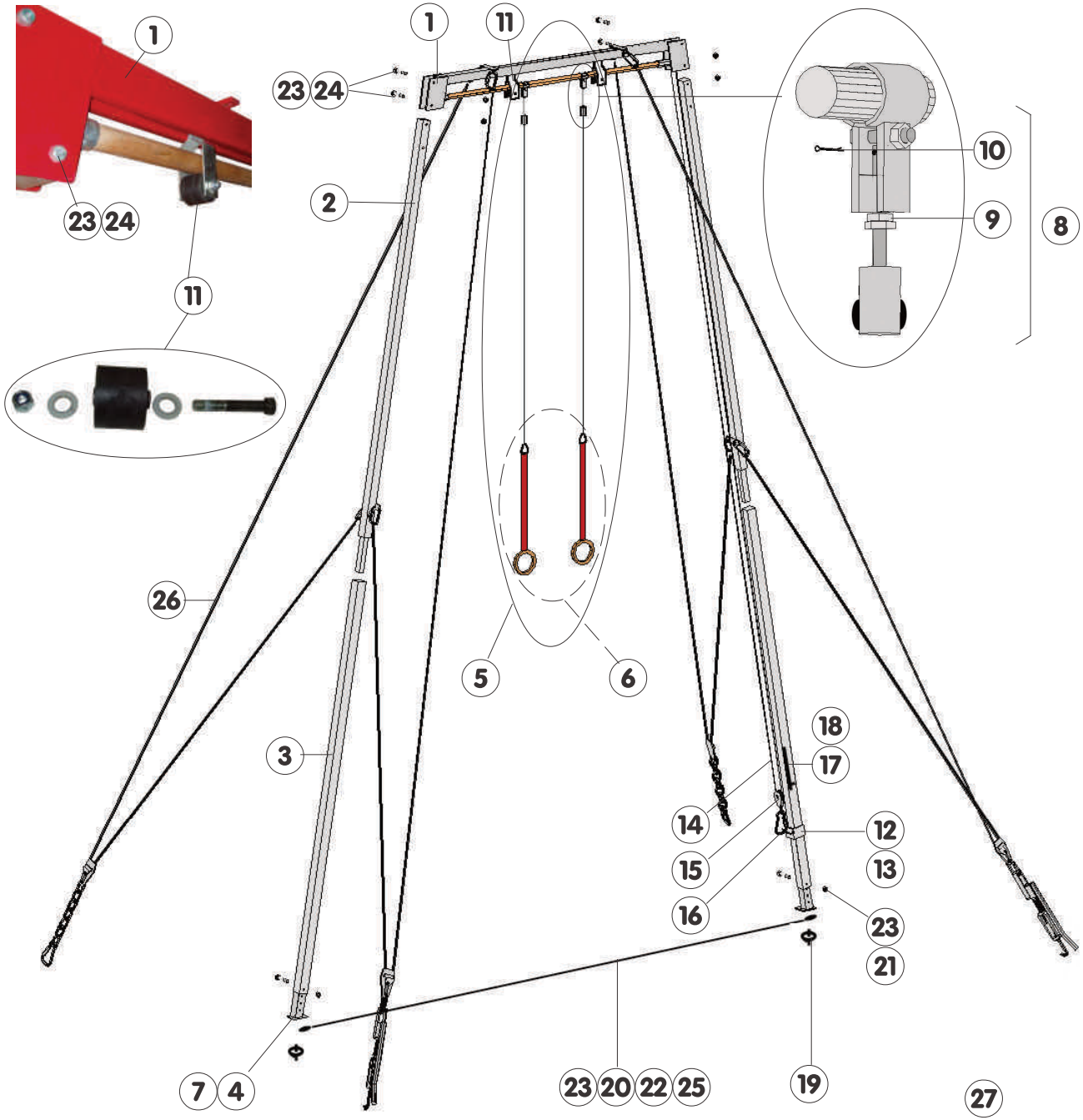

NOT SHOWN

To order spare parts, provide the description, part no., and delivery date of the entire apparatus.

ITEM	QTY	DESCRIPTION	REFERENCE	REMARKS
30	-	-	-	-
29	-	-	-	-
28	-	-	-	-
27	1	Handling pole for rings	3785	spare kit
26	1	Bracing cables	3700/10	pack
25	2	M12x80 PF H screw	VH0012080Z	-
24	6	M12x100 PF H screw	VH0012100Z	-
23	10	M12 H locknut	VEHF12000Z	-
22	2	12x27 flat washer	VRP012270Z	-
21	2	M12x90 PF H screw	VH0012090Z	-
20	1	M'2000 spacing cable	3770/05	-
19	2	Support pivot	328/02	included in 26
18	1	+/– adjustment self-adhesive strip	QAUSOUPLE+	-
17	1	Graduated self-adhesive strip	QAU127TRNO	-
16	1	Quick link No.8	QMRA00008Z	-
15	1	Single pulley ø51	371/15	spare kit
14	1	Elasticity adjustment cable	3732	spare kit
13	1	Burnished M8X16 HC screw	VHC008016N	-
12	1	Painted cable tightener	-	-
11	1	Pair of moving silent-blocs	3770/17	spare kit
10	2	3x28 split pin	VGF032028Z	-
9	4	HM14 lower nut	VEHM14000Z	-
8	2	Dynamic frame pivot	377/30	-
7	2	Frame pad ø10cm	370/05	each
6	1	Pair of rings + straps	3720	spare kit
5	1	Pair of rings + cables	3770/14	pack
4	2	Frame base sliding tube	-	included in 3
3	2	Dynamic frame lower upright	3770/03	pack
2	2	Dynamic frame upper upright	377/02	pack
1	1	Head of dynamic frame	377/00	each

GYMNOVA
RUE GASTON DE FLOTTE
13012 MARSEILLE
Tél. : 33-(0)-4-91-87-51-20
Fax : 33-(0)-4-91-93-86-89

Elastically Adjustable Ring Frame M'2000

BY: J.GAUTIER	DATE: 04/12/06	NM37j	Ref. : 3770A

THIS DOCUMENT IS THE PROPERTY OF GYMNOVA, IT IS CONFIDENTIAL AND SHALL NOT BE REPRODUCED WITHOUT PRIOR AUTHORIZATION.

GYMNOVA
CS 30056 - 45 RUE GASTON DE FLOTTE
13012 MARSEILLE CEDEX 12 (FRANCE)
TEL. 33.(0).4.91.87.51.20 - FAX.33.(0).4.91.93.86.89
www.gymnova.com - info@gymnova.com

ISO 9001
ISO 14001
BUREAU VERITAS
Certification

ASSEMBLY INSTRUCTIONS	NM181d	06/03/09
STANDARD CABLING M'2009 FOR RING FRAMES	**3700/40**	

KEEP THIS DOCUMENT

Ref. : 3700C

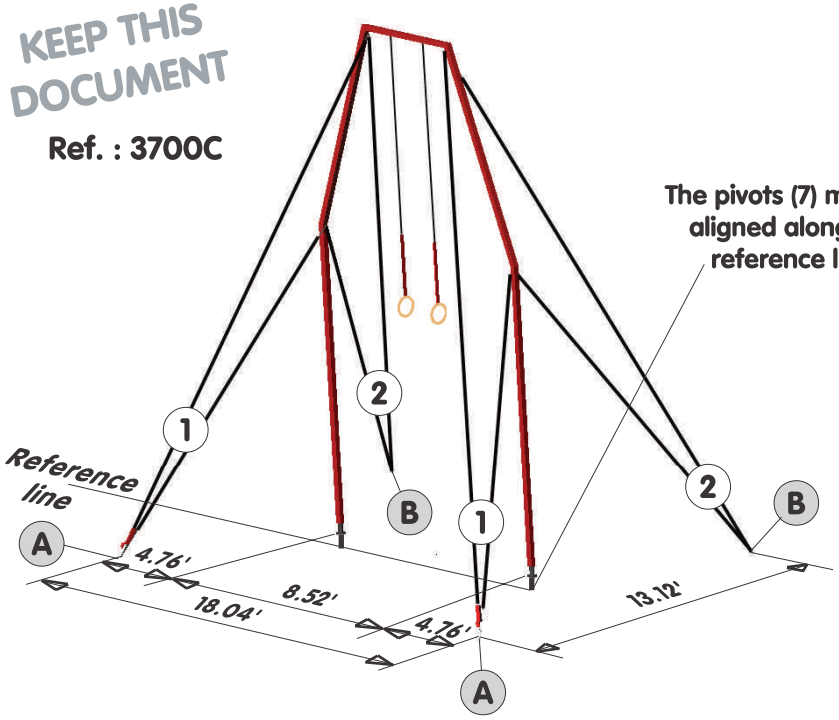

Ref. : 3770D

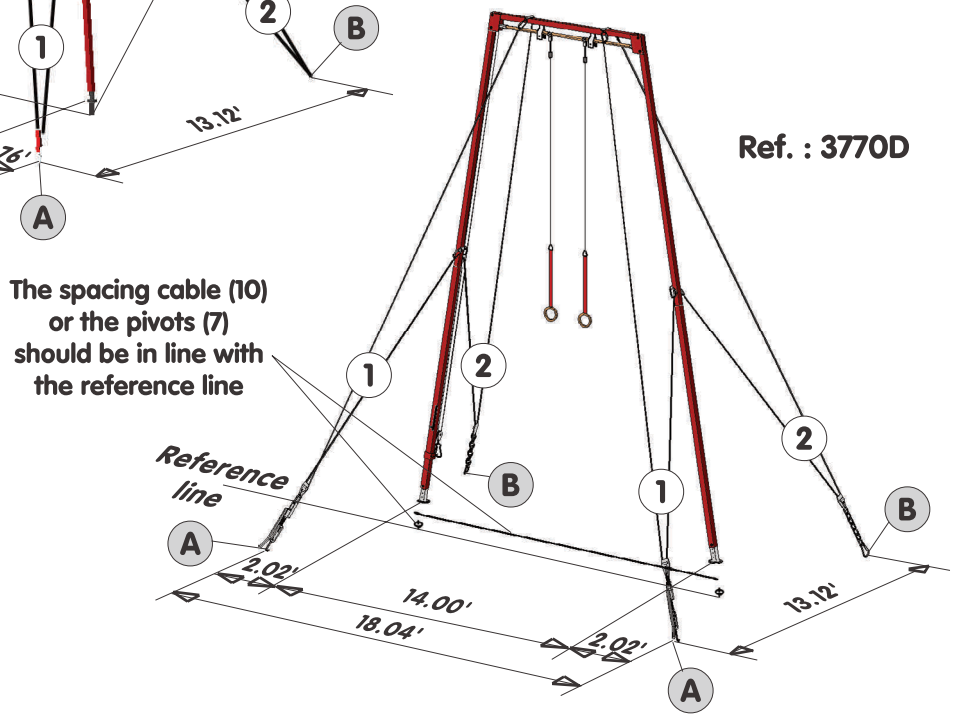

Warning:

This equipment should be installed by a qualified individual.
The apparatus should only be used by one person at a time, under the supervision of a qualified individual.
Using this equipment for purposes other than those originally intended is not allowed.
Attachments that are not provided with the apparatus may only be used if the support complies with the **CC34** specifications for GYMNOVA chemical anchors, (ref. : 2005 or ref. : 2010) or **CC22** for GYMNOVA retractable anchors, (ref. : 2000/40 - 2000/80).
Make sure that the quick links are closed and anchors are tightened before tightening the cables.
Do not use the equipment when the cables are slack.

Compliance:

This equipment complies with the requirements of the European standard EN 913 "Gymnastic equipment - General safety requirements and test methods".

Recommendations:

As shown in French Standard NF S52-400 the following is recommended:
- keep these instructions for subsequent reference (inspection, maintenance, etc.).
- periodically carry out predictive maintenance.
- depending on how much it is used, have the equipment serviced yearly or every few years.

Packaging:

1 Pack (ref.: 3700/40) Dimensions: 400 x 300 x 220 mm (15.75 x 11.81 x 8.66 in)
Weight: 17 kg (37.5 lb) Volume: 0.0264 m^3 (0.93 ft^3)

Constantly aiming to improve our products, we reserve the right to make changes to the equipment and dimensions without further discussion.

I. Preparing the cables:

1 - Floor positioning (see **Fig. 1**, **Fig. 2**, **Fig. 3** and **Fig. 4**):

- Plot the floor positioning of the anchors and distances between legs.
- Drill in accordance with the assembly instructions **NM13** for chemical anchors or **NM25** for retractable anchors (for pivots **(7)**: drill ø12,45 mm (1.77 in) deep, if required).

Important:
- The cable attachment points must resist 800 daN (see: NF S52-400).
- It is mandatory that the uprights are aligned with the reference line.

Layouts F.I.G.

Figure 1

Layout checking dimension: 22.31 ft diagonal

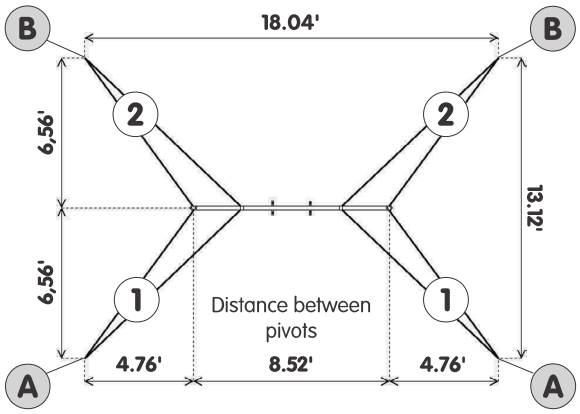

Ref. : 3700C

Figure 2

Layout checking dimension: 22.31 ft diagonal

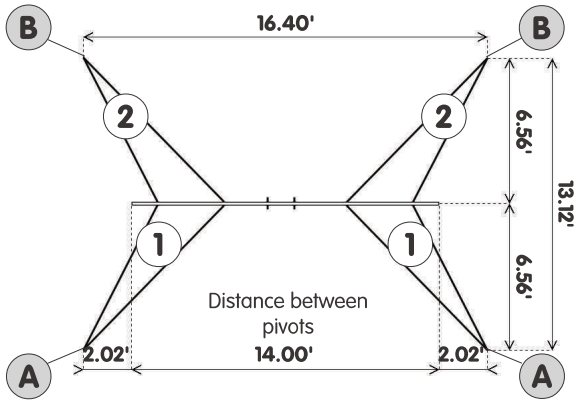

Ref. : 3770D

Other possible layouts

Figure 3

Layout checking dimension: 22.31 ft diagonal

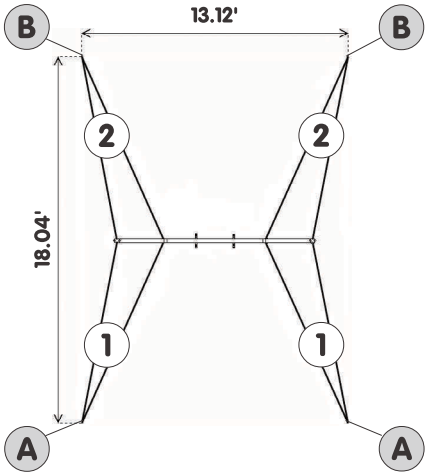

Figure 4

Layout checking dimension: 16,40 ft diagonal

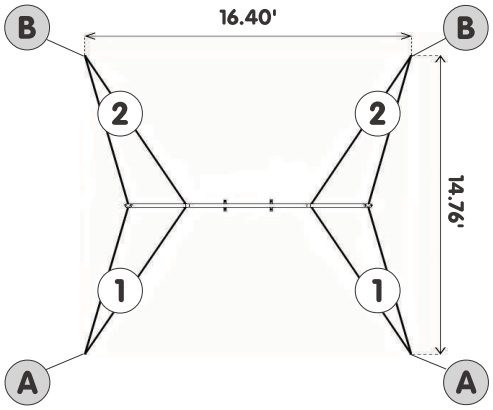

2 - Layout of cabling items:

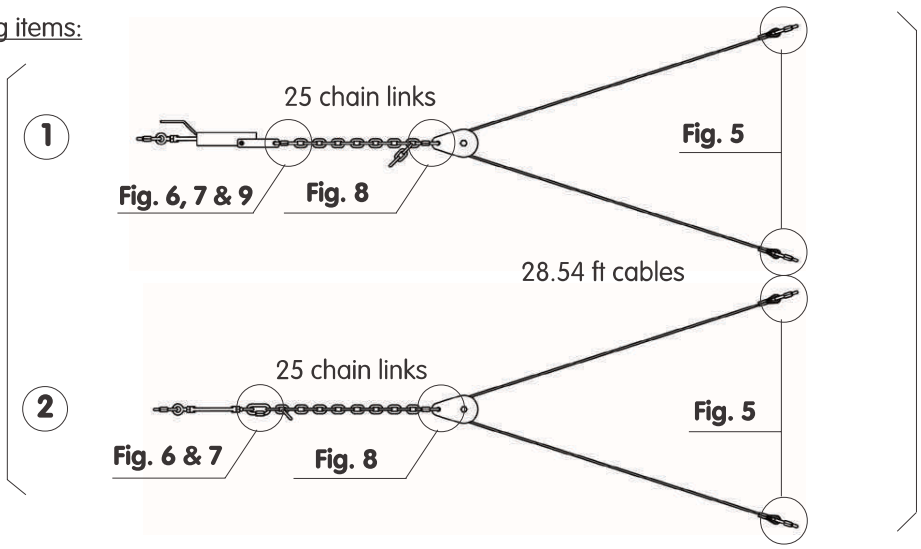

3 - Assembly principle and precautions:

- Make sure you assemble the quick links **(3)** in the proper direction (always tighten downward) (see **Fig. 5**).
- Adjust the turnbuckles **(5)** to medium length to enable the cables to be adjusted easily.

Note: Do not lock the floor attachments so that the bracing flats **(8)** can be positioned.

Figure 5 - Quick link **(3)** – assembling direction

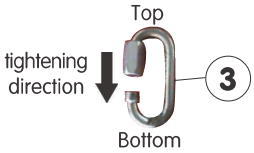

Figure 6 & 7 - Quick link **(3)** / chain assembly

Figure 8 - Chain + quick link **(3)** /pulley **(6)**

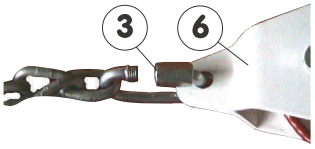

Figure 9 - Quick link **(3)** / quick tightener **(4)**

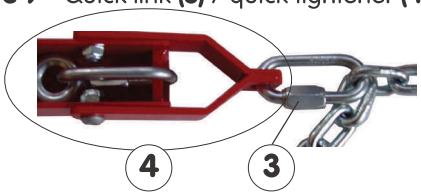

II. Assembling the cables (minimum of 6 people required):

- Identify the location of each cable using **Figures 1**, **2**, **3** and **4** (on page 2) and overview (on 1st page).
- Once the respective position of the cables is determined, attach one end of each cable at mid-height of the frame (uprights), and the other end at the top of the frame (head of 3770D and uprights of 3700C), observing the assembly direction of the quick links **(3)** (see **Fig. 5**).
- Hook the cables **(2)** to the rear anchors **(B)** using the turnbuckles **(5)**.
- Lift the frame and position it over the reference line or into the pivots **(7)**.
- Hold the frame and hook the cables **(1)** to the front anchors **(A)** using the open quick tighteners **(4)**.
- Set the frame assembly vertical (use a level) by adjusting the chain links, then fine-tune the adjustments using the turnbuckles **(5)** of cables **(1)** and **(2)**.

III. Adjusting and tightening the cables:

Important: Remember to lock all the floor attachments **(9)** before tightening the cables.

1 - To fine-tune the tension of cables **(1)**, open the quick tightener **(4)** (see **Fig. 11**), screw or unscrew the turnbuckle **(5)**. Lock the locknuts, then close the quick tightener (see **Fig. 10**).

2 - Position the quick tightener **(4)** so that it is above the turnbuckle **(5)**.

3 - Important: Lock the quick links **(3)** and the locknuts on turnbuckles **(4)** and **(5)** using the wrench.

Figure 10 - Slack cabling: Open quick tightener

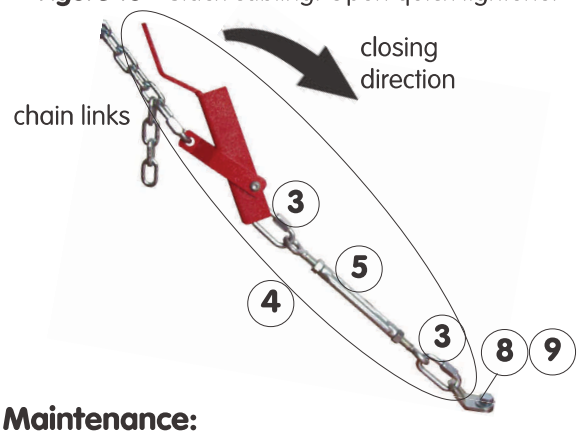

Figure 11 - Tightened cabling: Closed quick tightener

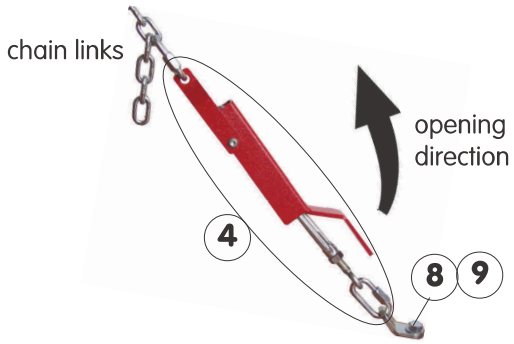

IV. Maintenance:

1 - A regular cleaning of the apparatus allows better viewing of the problems, if any (distortion, breakage, or corrosion).

2 - Before use, thoroughly check wear parts and safety elements each time for good condition and operation: wear of cables, quick links **(3)**, chain links, bracing flats **(8)**, quick tighteners **(4)**, the turnbuckles **(5)** and pulleys **(6)**.

3 - Check the tightening of cables and closure of quick links, before each use.

4 - Check that the anchors **(9)** are locked and that they do not draw out from the floor.

5 - Make sure pulleys are not jammed.

6 - Important:

- If a problem is detected or suspected, do not use the equipment as long as it has not been checked by a technician.
- Any damaged or distorted piece should be replaced as soon as possible.

V. Storage:

Always store the equipment away from humidity and heat.

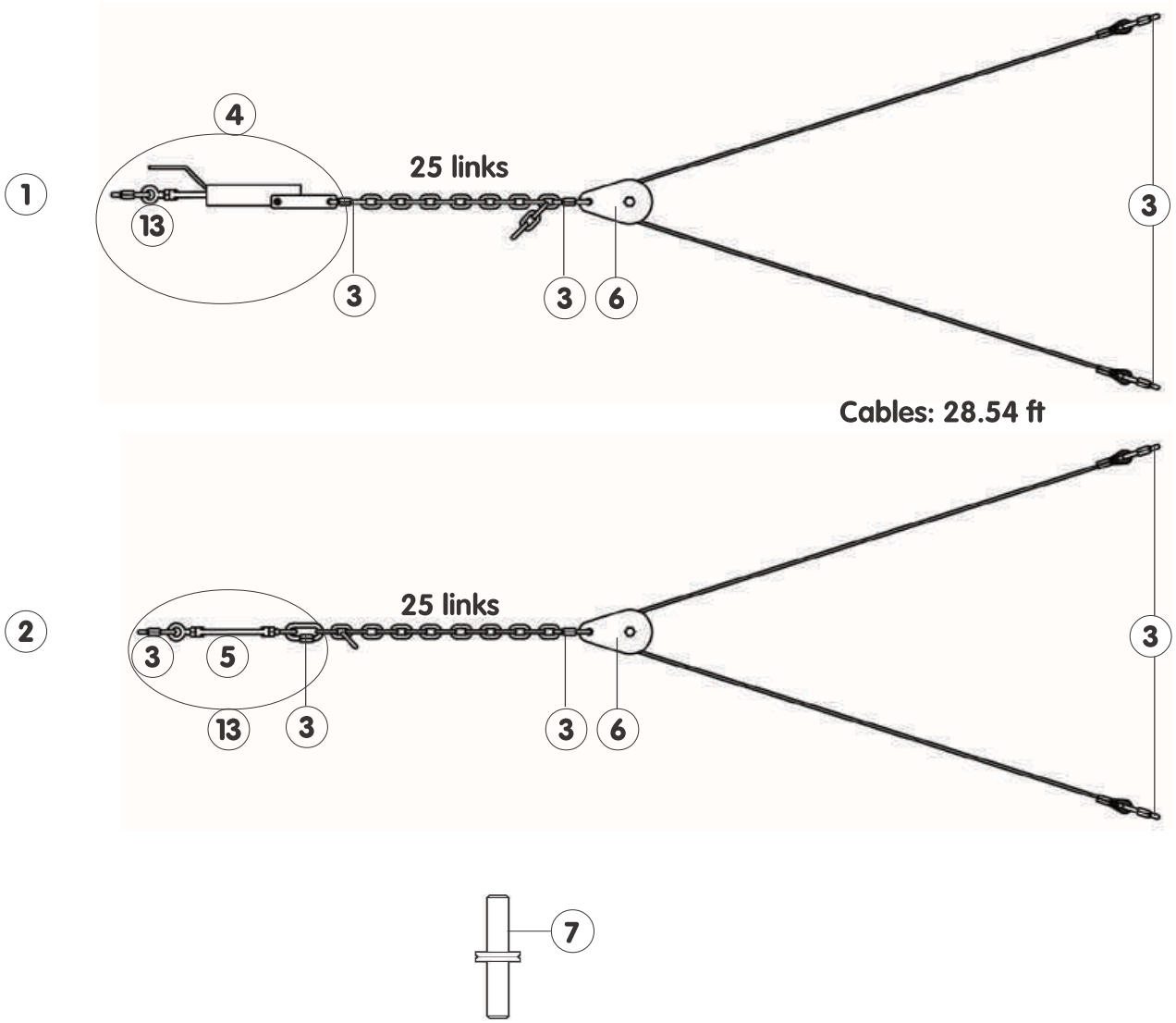

To order spare parts, provide the description, part no., and delivery date of the entire apparatus.

ITEM	QTY	DESCRIPTION	REFERENCE	REMARKS
29	-	-	-	-
28	-	-	-	-
27	-	-	-	-
26	-	-	-	-
25	-	-	-	-
24	-	-	-	-
23	-	-	-	-
22	-	-	-	-
21	-	-	-	-
20	-	-	-	-
19	-	-	-	-
18	-	-	-	-
17	-	-	-	-
16	-	-	-	-
15	-	-	-	-
14	-	-	-	-
13	4	M12 Turnbuckle + Quick link	QTELEMA812	each
12	-	Share of 4 brac. flats+screws	3120/40	spare kit
11	-	Share of 2 brac. flats+screws	3120/20	spare kit
10	1	M'2000 spacing cable	3770/05	not provided
9	-	4 retractable anchors	2000/40	not provided
9	-	4 chemical anchors	2010	not provided
8	4	Bracing flat	-	not provided
7	2	Support pivot	328/02	each
6	4	Single pulley, ø80	371/21	each
5	4	Turnbuckle M12 O/O	QTELE1012G	each
4	2	Quick tightener	2550A	spare kit
3	18	Quick link No.8	QMRA00008Z	-
2	2	Cable + turnbuckle	3700/41	spare kit
1	2	Cable + quick tightener	3700/42	spare kit

GYMNOVA
RUE GASTON DE FLOTTE
13012 MARSEILLE
Tél. : 33-(0)-4-91-87-51-20
Fax : 33-(0)-4-91-93-86-89

STANDARD CABLING M'2009 FOR RING FRAMES

BY: J.BRIOT | DATE: 06/03/09 | NM181d | Ref. : 3700/40

THIS DOCUMENT IS THE PROPERTY OF GYMNOVA, IT IS CONFIDENTIAL AND SHALL NOT BE REPRODUCED WITHOUT PRIOR AUTHORIZATION.